BIGSKY
AIRLINES
702M

Fact Sheet for

Fairchild Metroliner

- Passengers
  - 19
- Crew
  - 2
- Engines
  - Two Garrett TPE331-11U and -12U turboprop
  - 1,000 horsepower each
- Speeds
  - Normal cruise speed : 260 knots or 290 mph
- Performance
  - Maximum range : 1,800 NM or 2,000 SM
- Ceiling
  - Maximum operating altitude : 25,000 ft
- Weights
  - Maximum takeoff weight : 16,500 lbs
  - Empty weight : 10,000 lbs
  - Maximum fuel load : 4,342 lbs
  - Maximum payload : 4,600 lbs
- Dimensions
  - Length : 59.4 ft
  - Wingspan : 57.0 ft
  - Height : 16.7 ft
  - Cargo Door : 53 x 51 in

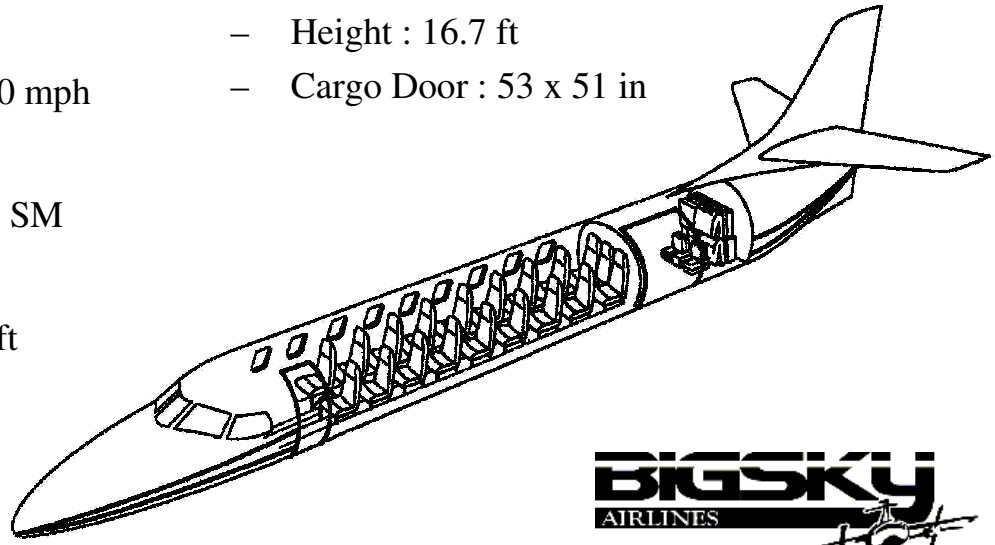

BIGSKY AIRLINES